Blinky™

Screw (S)/ Bolt (B)/ FlexiTap(Q)

ACC-BWM3-S/B/Q

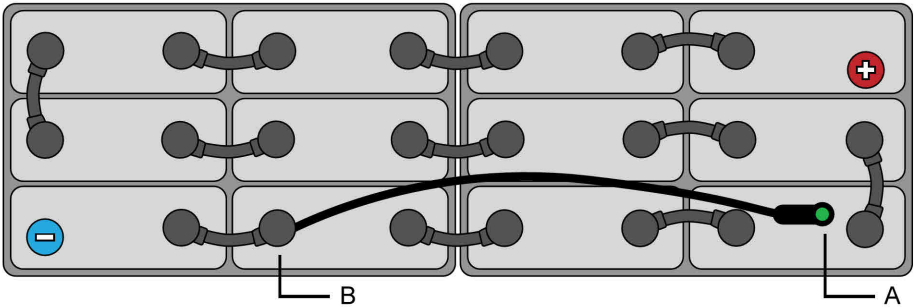

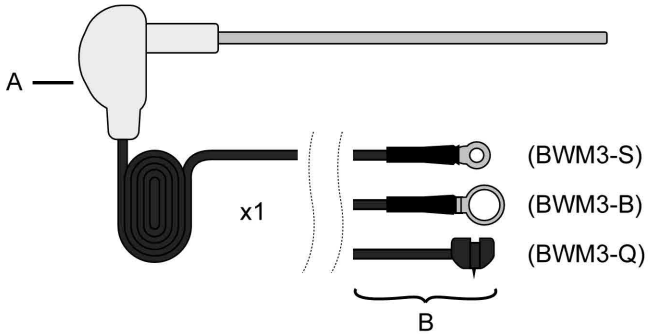

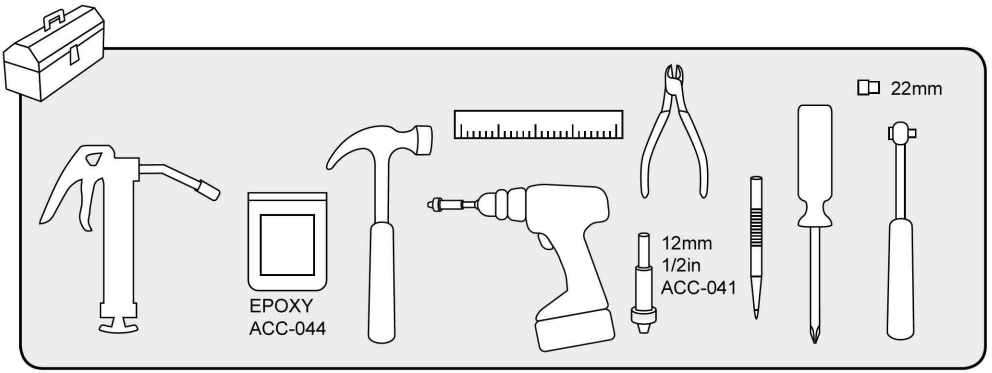

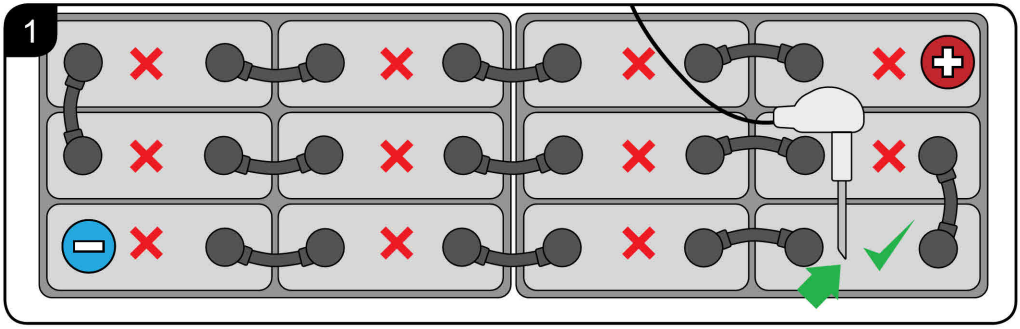
1

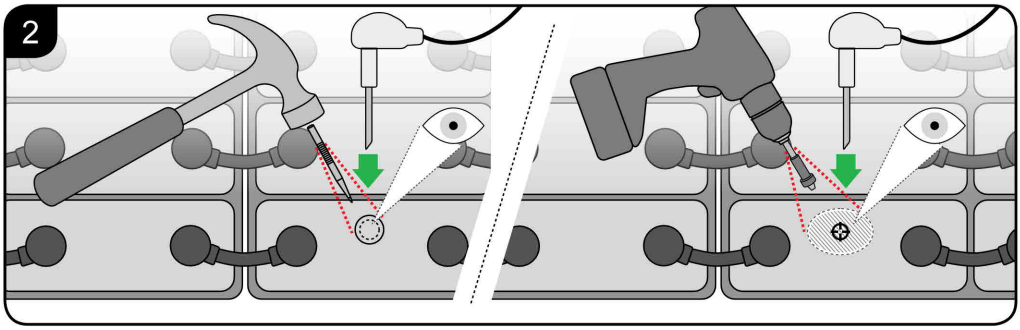
2

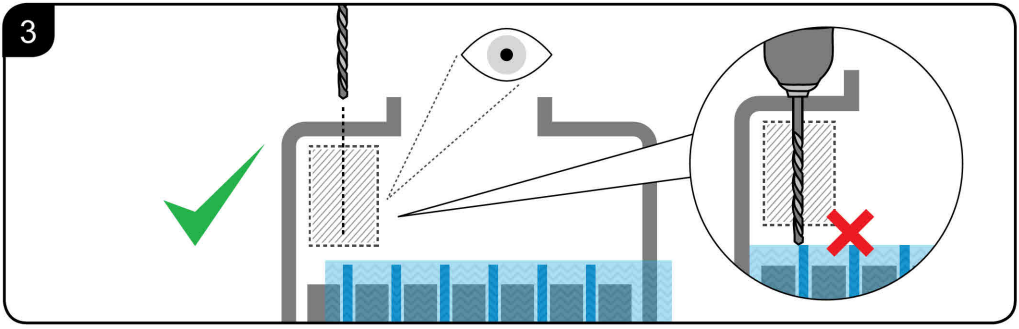
3

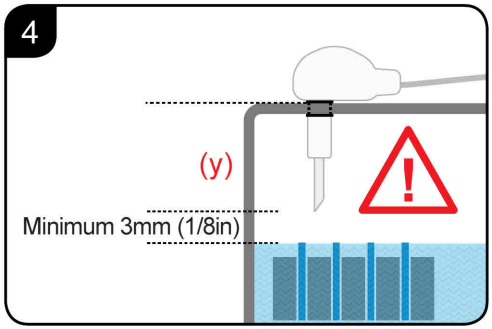
4
(y)
Minimum 3mm (1/8in)

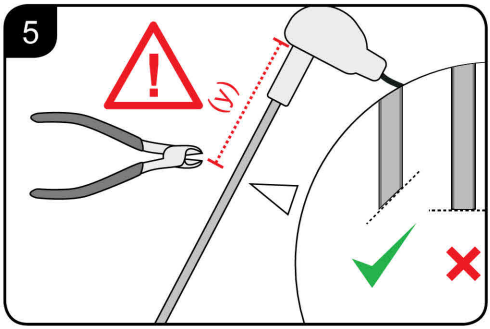
5
(y)

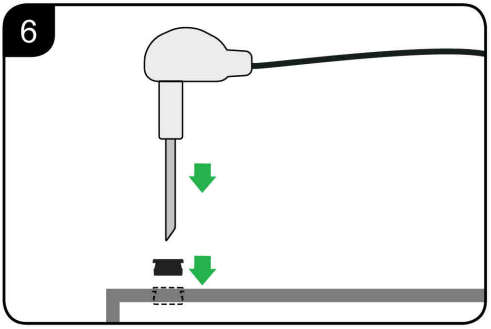
6

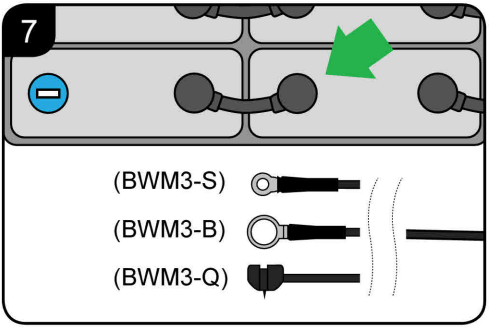
7
(BWM3-S)
(BWM3-B)
(BWM3-Q)

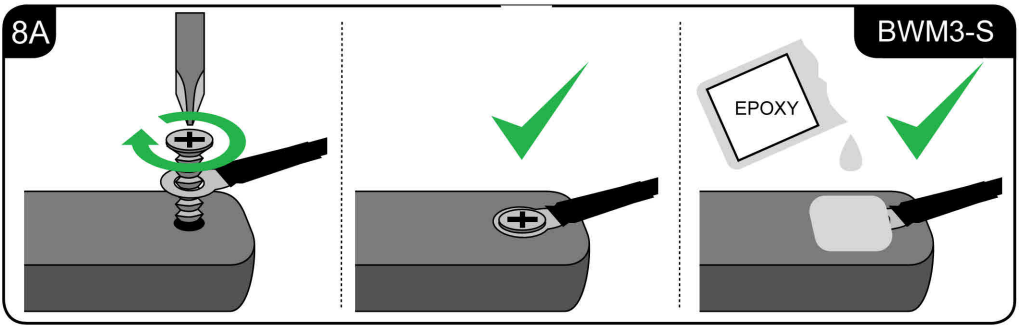
8A
BWM3-S
EPOXY

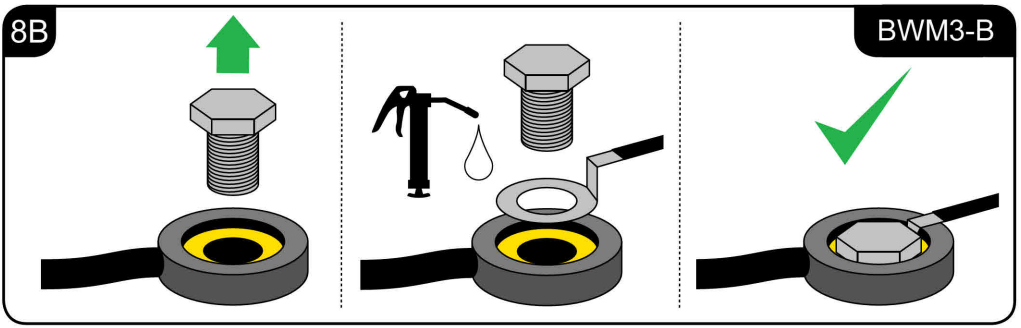
8B
BWM3-B

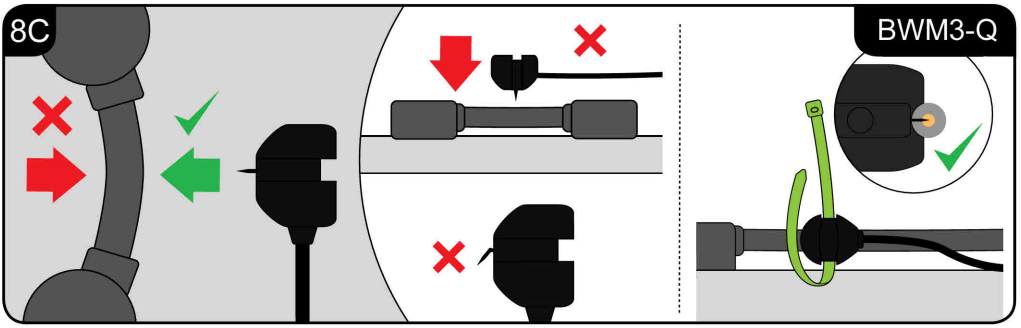
8C
BWM3-Q

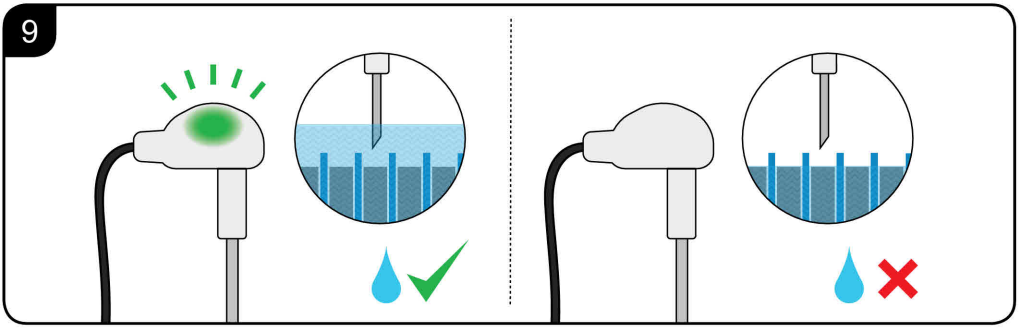

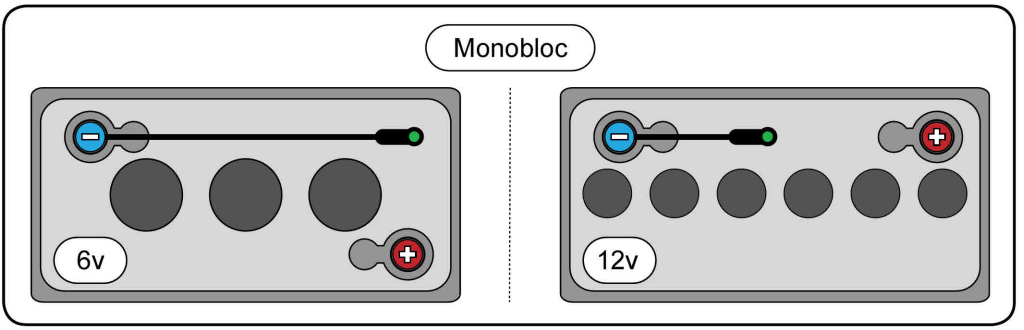

Philadelphia Scientific®
industrial battery innovation

Americas: Info@phlsci.com
EMEA: info@ps-europe.net
Asia Pacific: info@phlsci.com.au
www.phlsci.com

Copyright © 2015 by Philadelphia Scientific LLC. All Rights Reserved.
Philadelphia Scientific and the PS logo are registered trademarks of Philadelphia Scientific LLC. Blinky is a trademark of Philadelphia Scientific LLC

DOC0074